YOSHIMURA
RESEARCH&DEVELOPMENT OF AMERICA, INC.
5420 DANIELS STREET STE A, CHINO CA 91710 · (800)634-9166 · (909)628-4722 · FACSIMILE (909)591-2198
WWW.YOSHIMURA-RD.COM

OFF-ROAD PERFORMANCE EXHAUST SYSTEM

KTM

2011-13 250 SX-F
2011 350 SX-F
2011-14 450 SX-F
2012 450SX-F Factory Edition
2011-13 350 EXC-F

263502D321	*STAINLESS STEEL RS4 SLIP-ON WITH ALUMINUM SLEEVE*

THIS PRODUCT IS DESIGNED FOR USE IN CLOSED COURSE RACING AND IS NOT INTENDED FOR ANY OTHER USE.

※ CAUTION: The muffler packing on this system MUST be replaced every 6-8 hours of use, or after each moto. Failure to follow recommended muffler re-packing interval can cause muffler damage and may void the warranty. ※

NOTE: IN THE STATE OF CALIFORNIA, IT IS ILLEGAL TO MODIFY THE EMISSION CONTROL SYSTEM, WHICH INCLUDES THE CARBURETORS OF ANY VEHICLE.

CAUTION: ***Exhaust system can be extremely hot. Let motorcycle cool down before beginning installation. Always wear hand and eye protection and take precautionary measures to avoid injury.***

WARNING: ***Always properly support vehicle with a stand and/or lift when servicing or performing any work. Unstable vehicles may present dangerous conditions and may cause property damage, personal injury and/or death.***

Note: Read through all instructions before beginning installation.

Tools Needed:

Metric Socket Set
Ratchet Wrench and Extension
Torque Wrench
Spring Puller Tool

Installation Steps:

1. Stock exhaust removal.

a. Follow owner's manual instructions to remove stock silencer.

b. Loosen tailpipe mount.

2. Yoshimura slip-on installation.

a. Install Yoshimura muffler onto stock tailpipe and secure using included hardware. Do not tighten bolts or install springs at this time.

b. Tighten muffler mounts to 7.4 ft-lbs (10 N-m).

c. Install supplied spring between stock tailpipe and Yoshimura muffler. Tighten tailpipe mount

3. *Before starting motorcycle, check for proper clearance between new exhaust system and rear suspension (i.e. tire, swing-arm, brake, rear shock, engine etc). If any problem is found, please carefully follow through the installation steps again. If problem still persists, please call Yoshimura Tech Department at (800) 634-9166 / in CA (909) 628-4722.*

It is recommended that the muffler and tailpipe be wiped down with rubbing alcohol to remove oil and fingerprints. This will help prevent tarnishing of the finish after the exhaust is heated up.

NOTE: After starting motorcycle, it is normal for new exhaust system and muffler to emit smoke until oil residue burns off.

IMPORTANT NOTE

The Yoshimura Slip-On exhaust system comes pre-installed with the 450SX-F AMA 94 dB Sound Insert. Inserts for the 250SX-F and 350SX-F is included in the kit.

See parts diagram list and change inserts accordingly. Check with your local racing organization for sound specification.

Fuel Injection Mapping:

For best results and to extract the most performance out of the Yoshimura system fuel injection mapping is recommended for closed course competition use only.

Yoshimura R&D offers the PIM2 Fuel Injection controller kit with optional DATA Box. Please contact your dealer or Yoshimura R&D for details.

Note: It is illegal to modify the fuel injection system of any vehicle in the State of California.

Part List:

#263502D321

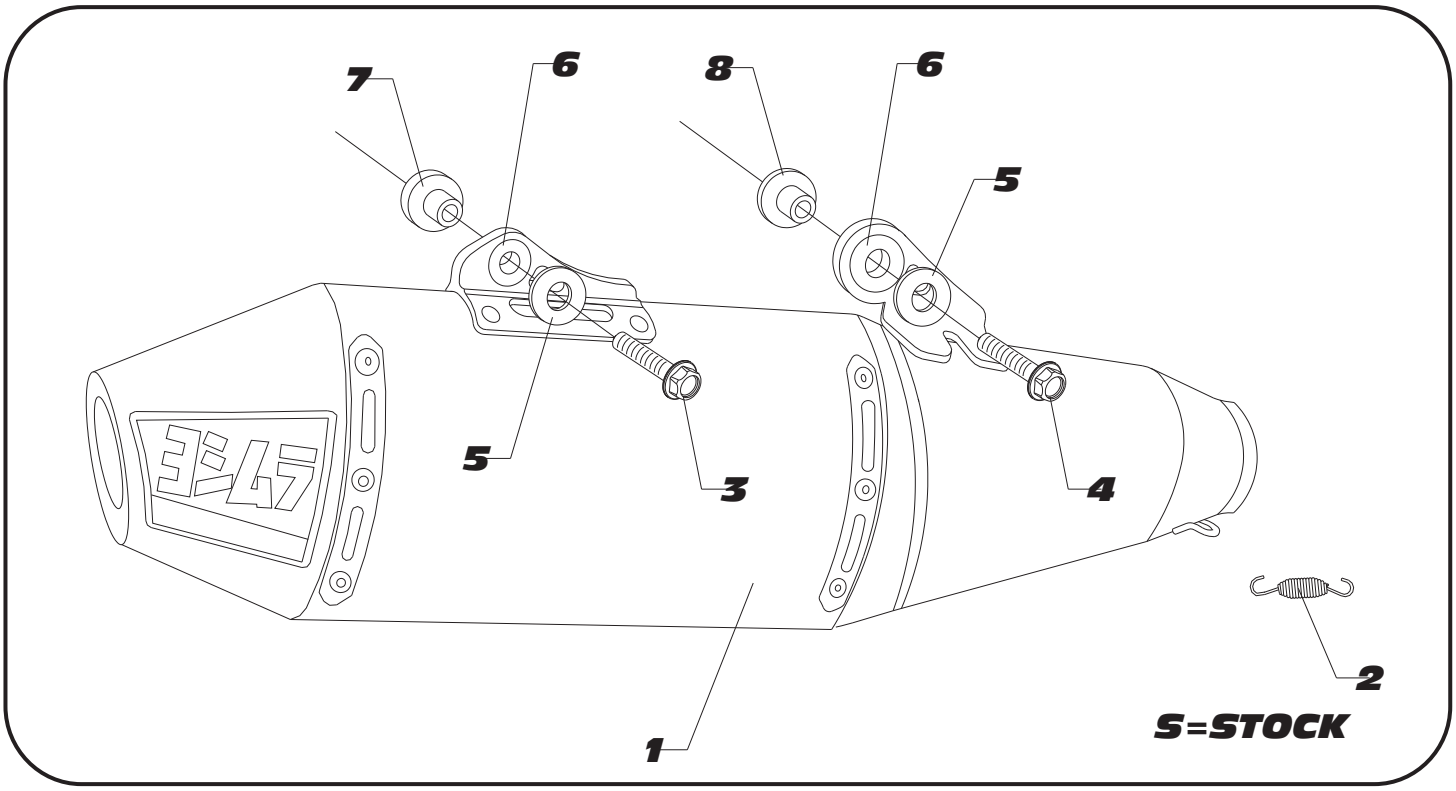

Parts Diagram

NO.	DESCRIPTION	QTY	PART #
1	Yoshimura RS4 Muffler with Aluminum Sleeve	1	263502D321-RMA
2	Medium Exhaust Spring	1	RACE-SPS-1
3	6mm x 45mm Flanged Hex Head Bolt	1	M6X45H
4	6mm x 35mm Flanged Hex Head Bolt	1	M6X35H
5	6mm Flat Washer, XL	2	6MMWASHERXL
6	Rubber Grommet	2	Z1022
7	Aluminum Spacer	1	ALS-022
8	Aluminum Spacer	1	ALS-023
**	250SX-F AMA 94dB Sound Insert	1	INS-13-K
**	250SX-F 2m-MAX Insert Kit	1	INS-13-K
**	350SX-F AMA 94dB Sound Insert	1	INS-14-K
**	350SX-F 2m-MAX Insert Kit	1	INS-10-K
**	450SX-F AMA 94dB Sound Insert (Installed)	1	INS-2M26-K
**	450SX-F 2m-MAX Insert Kit	1	INS-2M26-K
**	Offroad Endcap Plug	1	347PLUG
**	Spring Puller Tool	1	ST-200
**	Yoshimura Vinyl Sticker	1	17029
OPTIONAL REPLACEMENT PARTS			
Spark Arrestor		TEC-SD10	
Repack Kit		REPACK-RS4-PK11	

ALS-022

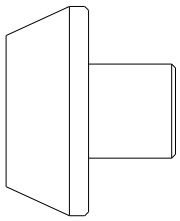

ALS-023

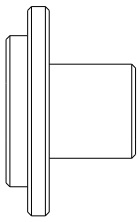

YOSHIMURA
RESEARCH&DEVELOPMENT OF AMERICA, INC.
5420 DANIELS STREET SUITE A, CHINO, CA 91710 · (800)634-9166 · (909)628-4722 · FACSIMILE (909)591-2198
www.yoshimura-rd.com

INS-2M26-K | YOSHIMURA TEC-SD10 SPARK ARRESTOR KIT

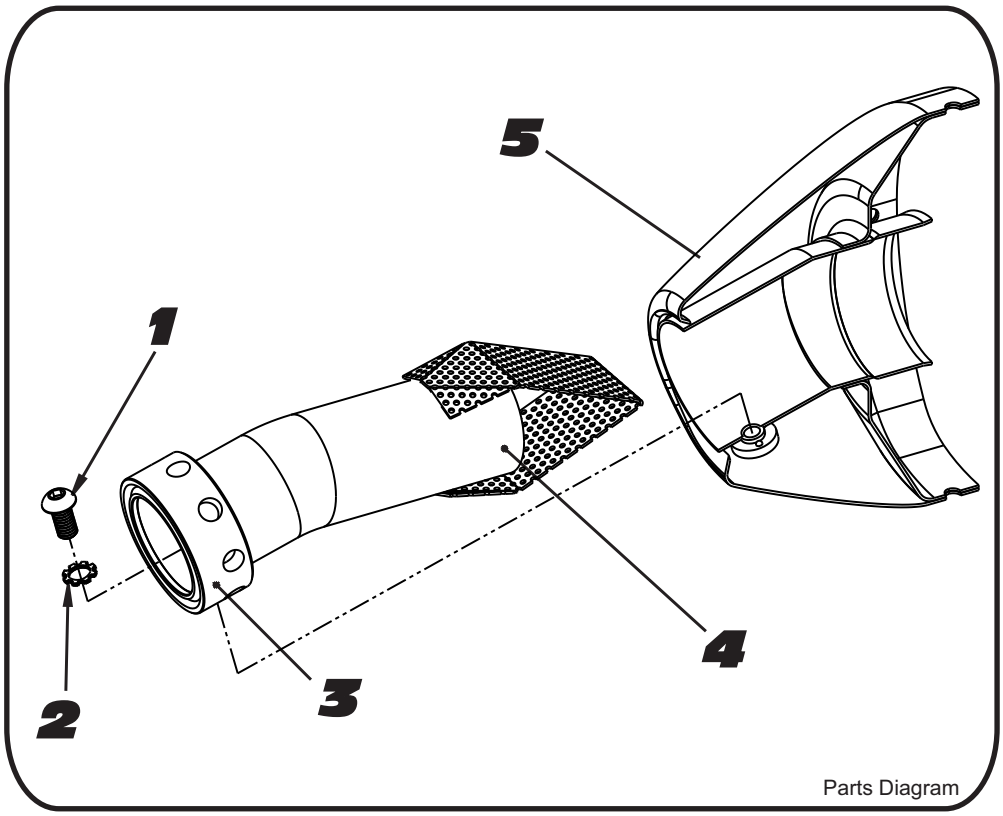

Parts Diagram

NO.	DESCRIPTION	QTY	PART #
1	6mm X 12mm Button Head Cap Screw	1	M6X12BHS
2	6mm Lock Washer	1	6MMLCKWSHR-TH
3	RS4 Spark Arrestor Ring 1.375"	1	RS4-RING-1375
4	RS4 2M Max Insert	1	INS-SSP-1.38X65
5	Yoshimura Exhaust	**	**

1 Using a 4mm Allen key, remove the bolt that secures the aluminum ring and sound insert to the muffler (see Parts Diagram for location).

2 Remove the sound insert from the muffler.

3 Inspect the sound insert for cracks or damage and replace if necessary.

4 Re-install sound insert and aluminum ring. Torque the sound insert securing bolt to 1.0 kg-m (7.3 lb-ft). NOTE: It is recommended that a low strength "Loc-tite" is used on the sound insert securing bolt.