PERFORMANCE EXHAUST SYSTEM

APPLICATION

YEAR	MODEL
2012-2013	Kawasaki ZX-14R w/ABS

PRODUCT

1414000220	R77 SS Full-System Exhaust with Carbon Fiber Sleeve; Stainless Steel Endcap
1414000520	R77 SS Full-System Exhaust with Stainless Steel Sleeve; Carbon Fiber Endcap
1414000550	R77 SS Full-System Exhaust with Stainless Steel Sleeve; Stainless Steel Endcap

!	This product is designed for use in closed course racing and is not intended for highway use. In the state of California, it is illegal to modify the emission control system, which includes the fuel injection of any vehicle.
!	You must know how to remove and replace your stock exhaust in order to install this product otherwise have it installed by a professional mechanic. Keep all stock parts from your existing system as some components may be necessary to install your new Yoshimura exhaust depending on the application.
!	Read through all instructions before beginning installation. Exhaust system can be extremely hot. Let motorcycle cool down before beginning installation. Always wear hand and eye protection and take precautionary measures to avoid injury.

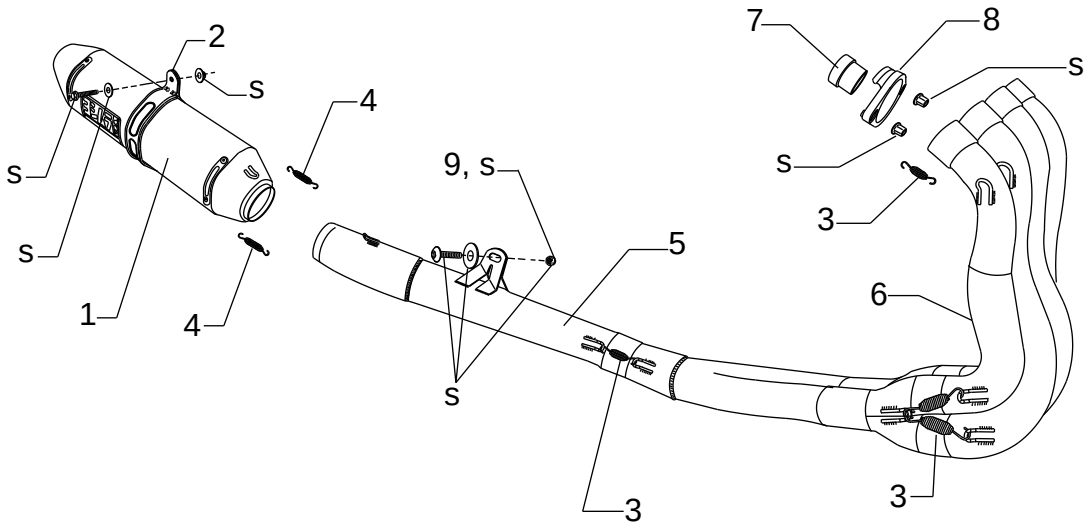

S = Stock

No.	Part #	Description	Qty
1	CRR77F146W SRR77F146W SRR77146W-SS	Yoshimura Muffler Assembly Carbon Fiber Sleeve; CF Endcap Stainless Steel Sleeve; CF Endcap Stainless Steel Sleeve; SS Endcap	1
2	1426-MPCAX 1426-MPCA	Yoshimura Muffler Clamp For Stainless Steel Sleeve For Carbon Fiber Sleeve	1
3	RACE-SPS-1	Medium Exhaust Spring	10
4	RACE-82MM	82mm Exhaust Spring	2
5	14140-420	Yoshimura Tailpipe	1
6	1426-404	Yoshimura Header	1
7	R795SDM	Yoshimura Manifold	4
8	CB916SDR-01	Yoshimura Flange	4
9	8MMNUT	8mm Flange Nut (for '08-'09 model)	1
**	HT SHLDR77	Muffler Clamp Heat Insulator	1
**	INS-03-K INS-04-K	Low Volume Sound Insert For Stainless Steel Endcap For Carbon Fiber Endcap	1
**	ST-200	Spring Puller Tool	1
**	17029	Yoshimura Sticker Sheet	1

5420 Daniels Street Chino, CA 91710 Tel (800) 634-9166 Fax (909) 591-2198 www.yoshimura-rd.com

-TOOLS REQUIRED-

Metric Socket Set • Combination Wrench Set • Torque Wrench • Metric Allen Wrench Set

-REMOVAL-

1. ***Remove lower rear cowling to ease stock tailpipe removal.***
2. ***Remove left and right stock mufflers and tailpipes.***
3. ***Remove left and right fairings.***
4. ***Remove lower radiator support bracket. Tilt radiator forward to ease removal of stock header.***
5. ***Remove stock header and exhaust port gaskets.***
   Note: Stock exhaust port gaskets will not be used with the Yoshimura Full-System.

-INSTALLATION-

1. ***Install Yoshimura manifolds and flanges into exhaust ports using stock header nuts. See below for correct flange orientation. Torque stock header nuts to 11Nm. (1.1kg-m, 8lb-ft)***
2. ***Install Yoshimura header by connecting one header leg at a time from one side of the engine to the other.***
3. ***Connect header to flanges using the supplied medium exhaust springs. Hook one end of the spring into the hole in the flange and pull the other end of the spring over the header's spring hook using the supplied spring puller tool. See below for spring hole location.***

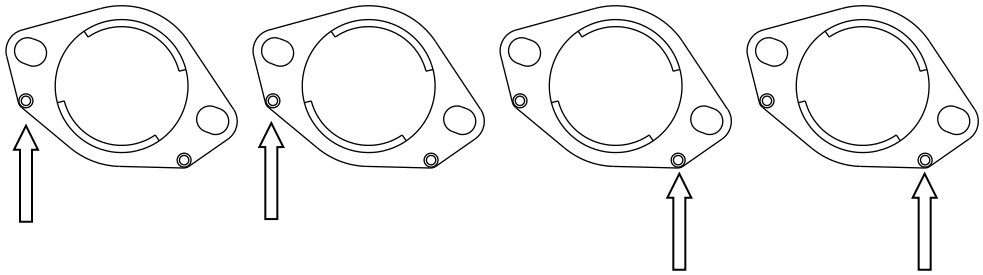

Flange Orientation and Spring Hole Location
View Looking Directly At Exhaust Port

4. ***Using a soft face mallet, gently tap header to fully seat each header leg onto its respective manifold.***
5. ***Install provided rubber heat insulator to inside of muffler clamp and slide muffler clamp onto muffler.***
6. ***Install Yoshimura muffler/tailpipe assembly onto header. See diagram for proper orientation and order of hardware.***
   Note[1]: Extra large stock muffler mount washer will not be used. For '08-'09 models, use supplied 8mm nut for tailpipe mount.
   Note[2]: Yoshimura muffler clamp mounts on the outside of the stock muffler mounting location. Yoshimura tailpipe bracket mounts on the inside of the stock tailpipe mount location.

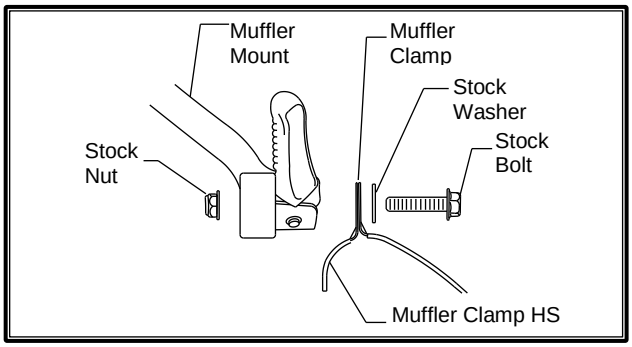

7. ***Connect Yoshimura tailpipe to Yoshimura header using the supplied medium exhaust springs.***
8. ***Torque muffler mounting bolts and tailpipe mounting bolts to 25Nm. (2.5kg-m, 18lb-ft)***
9. ***It is recommended that the entire exhaust system be wiped down with rubbing alcohol to remove oil and fingerprints. This will help prevent tarnishing of the finish after the exhaust is heated up.***
10. ***Re-install lower radiator support bracket.***
11. ***Re-install left and right fairings.***
12. ***Rotate rear axle so that the nut is on the left side.***
    Note: Failure to rotate axle could cause injury.
13. ***Fitment Check and Notes.***
    a. ***Before starting motorcycle, check for proper clearance between new exhaust system and rear suspension (i.e. tire, swing-arm, brake, rear shock, engine, and etc.) If any problem is found, please carefully follow through the installation steps again. If problem still persists, please call Yoshimura Tech Department at (800) 634-9166 / in CA (909) 628-4722.***
    b. ***It is recommended that the muffler and tailpipe be wiped down with rubbing alcohol to remove oil and fingerprints. This will help prevent tarnishing of the finish after the exhaust is heated up.***
    c. ***Note: After starting motorcycle, it is normal for new exhaust system and muffler to emit smoke until oil residue burns off.***