YOSHIMURA
RESEARCH&DEVELOPMENT OF AMERICA, INC.
5420 DANIELS STREET STE A, CHINO CA., 91786 · (800)634-9166 · (909)628-4722 · FACSIMILE (909)591-2198
www.yoshimura-rd.com

TRS TRI-OVAL PERFORMANCE EXHAUST

SUZUKI
97-00 GSX-R600
96-99 GSX-R750

1105462	*RACE ONLY BOLT-ON SYSTEM WITH CARBON FIBER*
1105465	*RACE ONLY BOLT-ON SYSTEM WITH STAINLESS STEEL*
1105467	*RACE ONLY BOLT-ON SYSTEM WITH TITANIUM*

THIS PRODUCT IS DESIGNED FOR USE IN CLOSED COURSE RACING AND IS NOT INTENDED FOR HIGHWAY USE.

NOTE: IN THE STATE OF CALIFORNIA, IT IS ILLEGAL TO MODIFY THE EMISSION CONTROL SYSTEM. WHICH INCLUDES THE CARBURETORS OF ANY VEHICLE.

Caution: Exhaust system can be extremely hot. Let motorcycle cool down before beginning installation.

Note: Read through all instructions before beginning installation.

Tools Needed:

12mm socket
3/8" ratchet and extension
12mm and 14mm wrench
Torque wrench

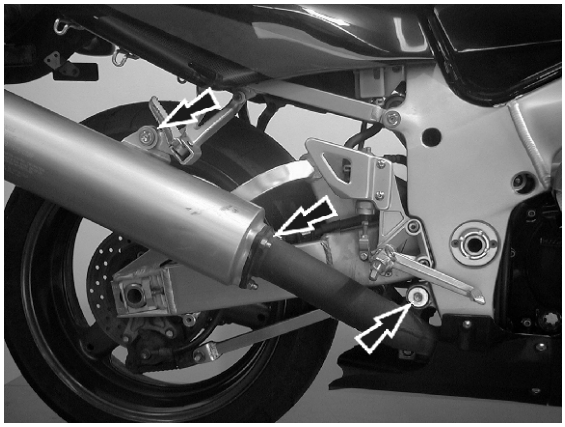

Fig. 1

Installation Steps:

1 Remove stock muffler and gasket.

2 Loosen tailpipe bolt at chassis mount (See Fig.1)

3 Install new muffler gasket.
(Not supplied - Suzuki part no. 14181-33E00)

4 Install Yoshimura muffler using supplied bolts.
Torque bolts to 2.3 kg-m (16.5 lb-ft).

5 Apply heat insulator to inside of muffler clamp and slide clamp onto muffler.
(Note direction of clamp in Fig. 2)

6 Mount clamp to stock muffler bracket using stock bolt, washer, and nut. (see Fig. 3)
Torque bolt to 2.5 kg-m (18 lb-ft)

7 Tighten tailpipe bolt at chassis mount.
Torque bolt to 2.5 kg-m (18 lb-ft)

8 Before starting the motorcycle, check for proper clearance between new muffler and motorcycle. (i.e. swing-arm, passenger foot-peg, rear wheel, etc.) If any problem is found, please carefully follow through the installation steps again. If problem still persists, please call Yoshimura tech. Dept. at (800)634-9166 / in CA (909)628-4722

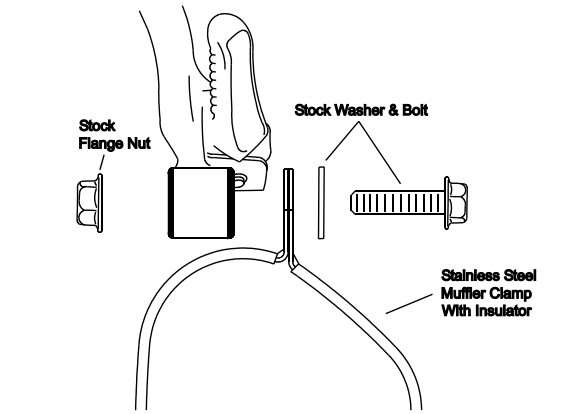

Fig. 2

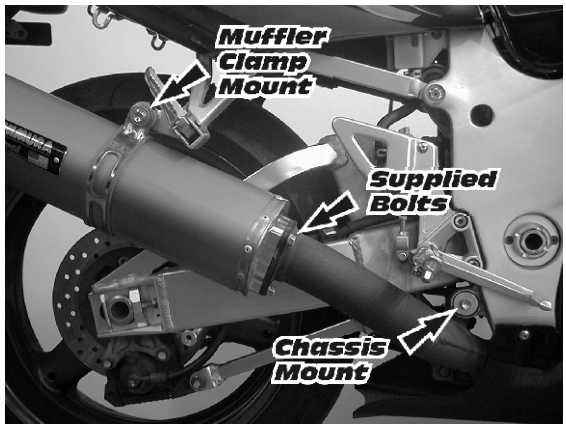

Fig. 3

Note: After starting motorcycle, it is normal for new muffler to smoke until oil residue burns off.

#110546 (2,5,7)

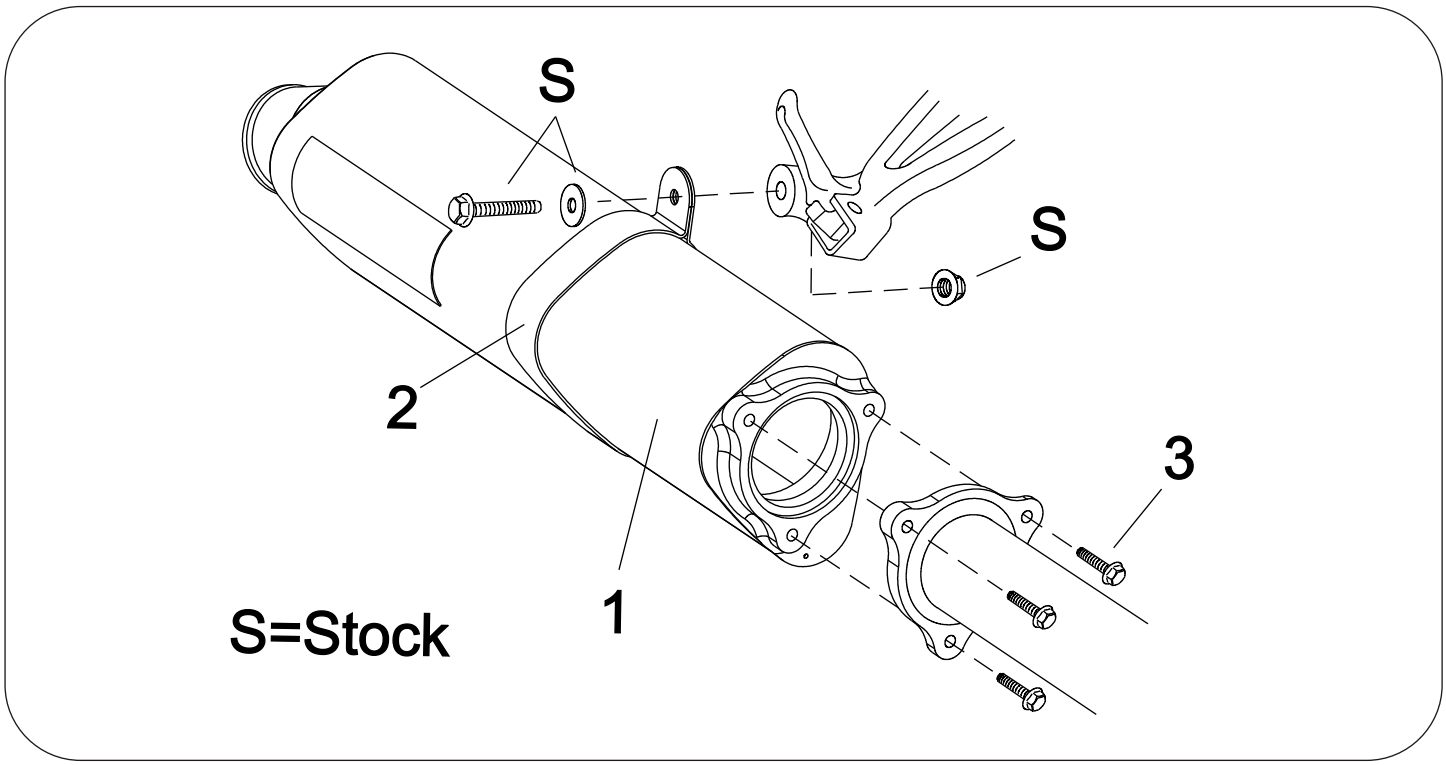

Parts Diagram

NO.	DESCRIPTION	QTY	PART #
1	TRS Tri-Oval Muffler Assembly	1	**
2	Stainless Steel Muffler Clamp	1	
	Stainless or Titanium Sleeve Use		CTS083X
	Carbon Fiber Sleeve Use		CTS083
3	8mm x 20mm Flange Hex Bolt	3	M8X20H
**	4.5" Heat Insulator	1	HT SHLDTRS
**	Yoshimura Vinyl Sticker	1	17029

Nuts and Bolts Guide (Actual Size):

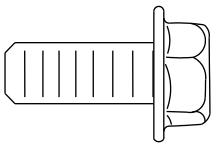

8mm x 20mm
Flange Hex Bolt