Honda XR/CRF 50

TRAINING WHEEL MOUNTING INSTRUCTIONS
P/N: 9501-0125

Part #	Qty.	Description
2200-70	1	Training Wheel Rod
FG1060	4	5/8" x 3/4" Spacers
HDW1057	4	8mm x 45mm Hex Bolt
HDW9002	2	5/16" Flat Washers
HDW2300	2	1/8" x 1-1/2" Cotter Pins
HDW9006	2	5/8" Fender Washers
PC513	2	Wheel

CUSTOMER MUST RECEIVE A COPY OF THIS INSTRUCTION SHEET AT THE TIME OF SALE

1. Place each tire and wheel on the axle and secure with the washer and cotter pin per the illustration.
   NOTE: Make sure the valve stem on the tire is facing in toward the machine.

2. Remove the footpeg bracket from the bottom of the engine and discard the bolts.

3. Hold the footpeg bracket back in place and mount the training wheels underneath the bracket with the 5/8"spacers in between. Using the 8mm x 45mm bolts, secure the training wheels to the bottom of the engine case sandwiching the footpeg bracket and spacers. Use the 5/16" flat washers under the head of the back bolts where the holes are slotted. Tighten the bolts to 10 ft/lbs.

NOTE: Check the operation of the rear brake before riding the bike. If out of adjustment the rear brake lever may contact the training wheel shaft before engaging the brake. Adjust as neccessary until the brake works properly.

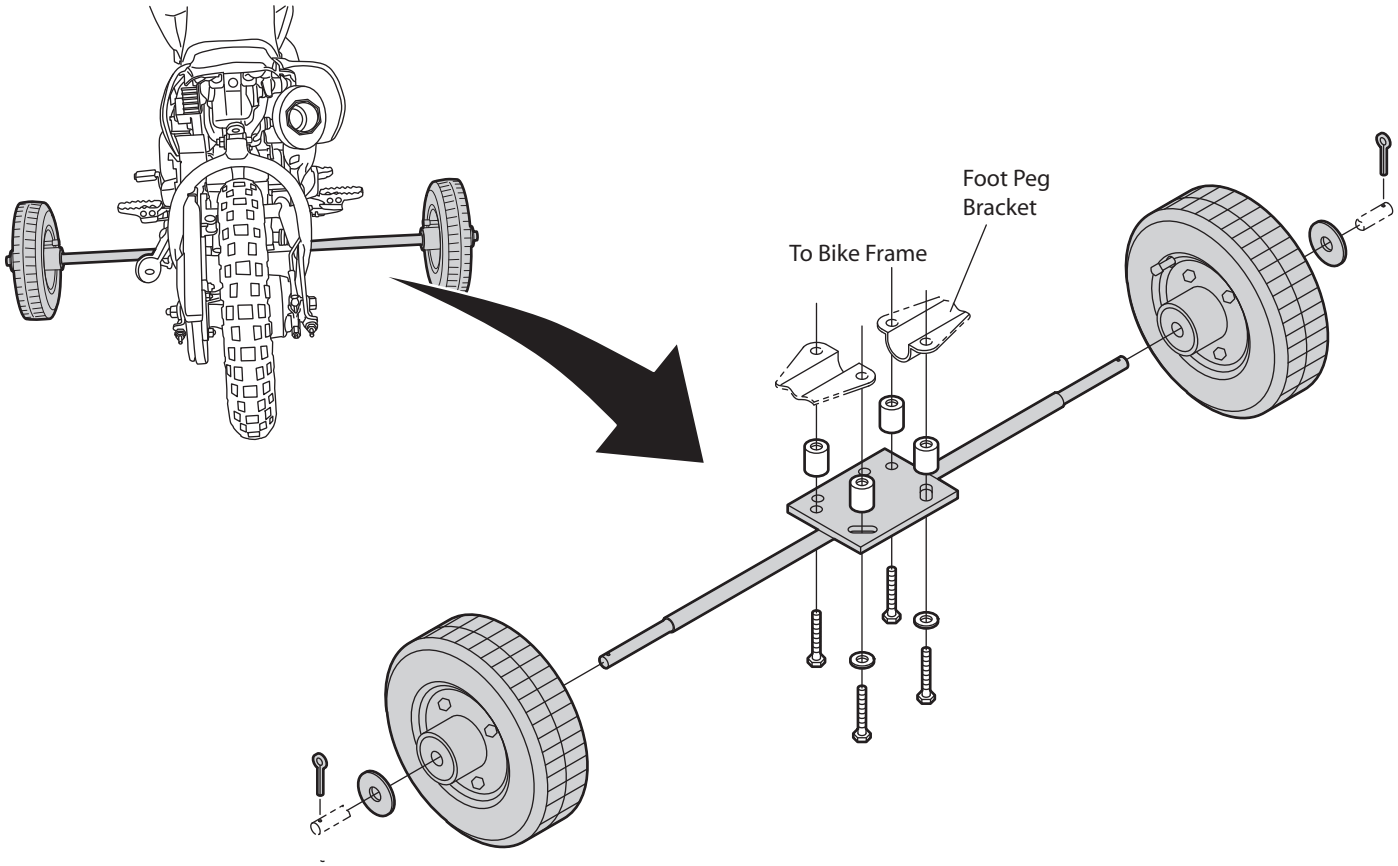

FOR QUESTIONS REGARDING YOUR ORDER OR RETURNS CONTACT THE COMPANY YOU PURCHASED FROM.
FOR TECHNICAL OR INSTALLATION QUESTIONS PLEASE CALL: **763-689-4800**

All images used are copyrighted property of CMP and may not be used without permission.