Part No. 2321-0207

MEK1856 REVISION 0

Trigger Lock Plates Only
MS Dyna Metric Batwing Fairing
Polished Aluminum

Aluminum parts are electrocoated (E-coated) for durability and weather resistance.

Before assembly, read Warnings inside

WARNING

1. During installation, make sure that the fairing and hardware do not interfere with any cables or wiring when the forks are turned all the way in either direction. Also make sure , through the full range of adjustment, that the fairing and hardware do not hit the gas tank.
2. This is a detachable fairing, ALWAYS make sure the locking mechanism is fully engaged after installing the fairing.
3. The improper installation of this kit and related components could result in serious injury or death.

CAUTION

1. Memphis Shades fairings are made from Lucite® acrylic, and will last for years with proper care. Clean your fairing with plenty of soapy water (mild dishwashing liquid is best) and a soft cotton cloth. Use your bare hands to feel and dislodge bugs, or cover with a wet, soapy towel and let it soak. Don't use paper towels and scrape with anything. Small scratches can be removed with NOVUS #2.
2. Never use any glass cleaning products, petroleum based chemicals, or cleaning agents with ammonia, bleach or any other harsh chemicals. This includes (but not limited to) RainX, brake fluid, acetone, paint thinner, benzene and gasoline. "If it hurts your nose, it will hurt the plastic."
3. Glass cleansing agents will cause severe damage to your fairing, and will void your warranty.
   For care and cleaning we recommend using **Memphis Shades All Kleer**, a unique cleaner/polish, bug remover and rain repellant that leaves a super slick surface that makes the next cleaning even easier.
4. At certain times of the day the Sunlight can reflect off the curvature of a fairing and cause extreme heat build-up on motorcycle instruments and instrument panel. Take care when parking. Park facing the sun, place an opaque object over the instruments or adjust the fairing to avoid reflections.

1. Kit Contents

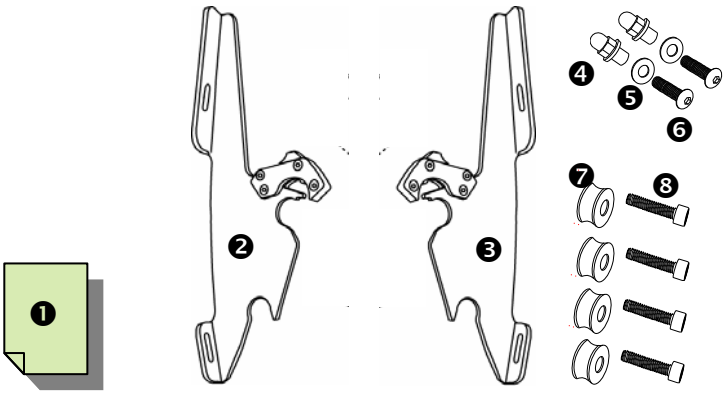

Ref	Code	Description	Qty
❶	I1856	Mounting Instructions	1
❷	M1133EC	Clutch side mounting plate assembly	1
❸	M1134EC	Throttle side mounting plate assembly	1
❹	M997	Acorn Nut	2
❺	M998	Washer	2
❻	M974	Hex head screw, black	2
❼	R330EC	1" Indented, recessed spacer	4
❽	M346	1/4 20 x 1 1/8 SS socket head cap screw	4

2. Mounting Instructions

1. Cover gas tank and front fender with towels to avoid damage during installation.
2. Remove the bolt securing each turn signal to front fork tube, open the clamp, remove the clamp from the fork and set aside the bolt and metal sleeve. (Fig 1)
3. On the clutch side, remove the brake line holder while you are relocating the turn signals, and then reinstall afterwards.
4. Relocate each clamp below the triple tree using the hardware provided with the mounting kit. (Fig 2)
5. Additional wire can be pulled out from the back of headlight. A few tugs should be sufficient. (Removing headlight lens will give you access to wires in case they become tangled) (Fig 4)
6. Install the two mounting plates onto the rear of the fairing with the acorn nuts and washers supplied. The tabs should point out, away from the headlight. (Fig 3)

Note: If you are adding the Batwing Fairing to your existing Fats / Slim or Sportshield mounting kit, you will need to add the spacer and longer bolt provided to each bushing (Fig 6)

Continued over…….

Memphis Shades warrants all product components, metal and plastic, against defects in materials and workmanship for 24 months.

For Parts and Warranty Help, Contact:

Memphis Shades, Inc.
P.O. Box 429
Rossville, TN 38066
(901) 853 0293
Visit us on the web at www.memphisshades.com or you can also reach us by email:
customerservice@memphisshades.com

Part No. 2321-0207

Trigger Lock Plates Only
MS Metric Batwing Fairing
Polished Aluminum

2. Mounting Instructions, continued

7. Slip the fairing mounting plates and fairing onto the fork clamp bushing. (Fig 5)
8. Secure the Left and Right side Trigger Lock, locking mechanism. (Fig 5)
9. Adjust the height, angle and alignment of the fairing then tighten **all** bolts

Fig. 1

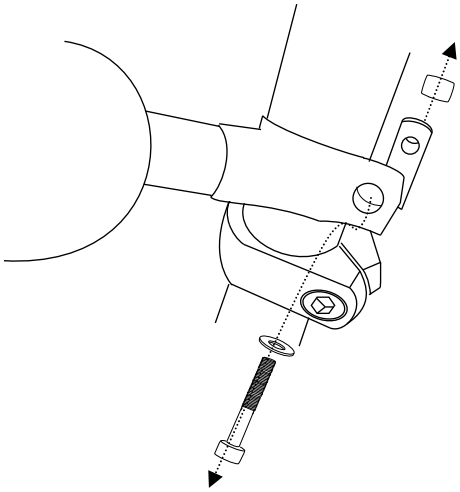

Fig. 2

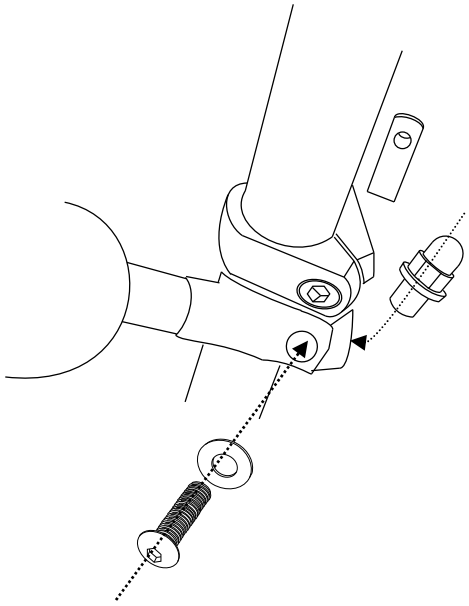

Fig. 3

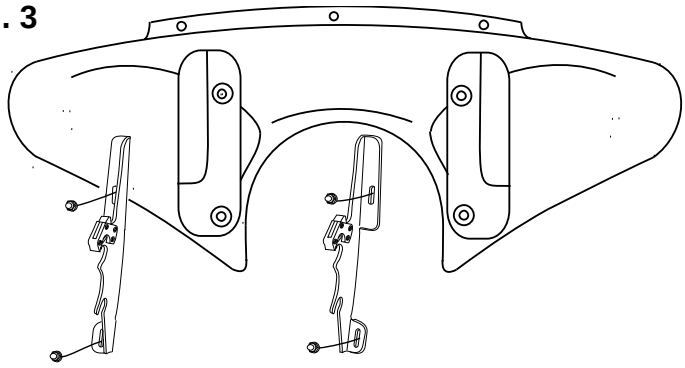

Fig. 4

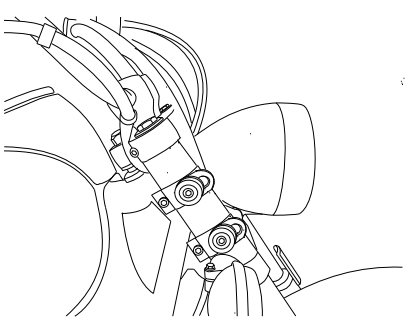

Additional wire can be pulled out from the back of headlight if required.

Fig. 5

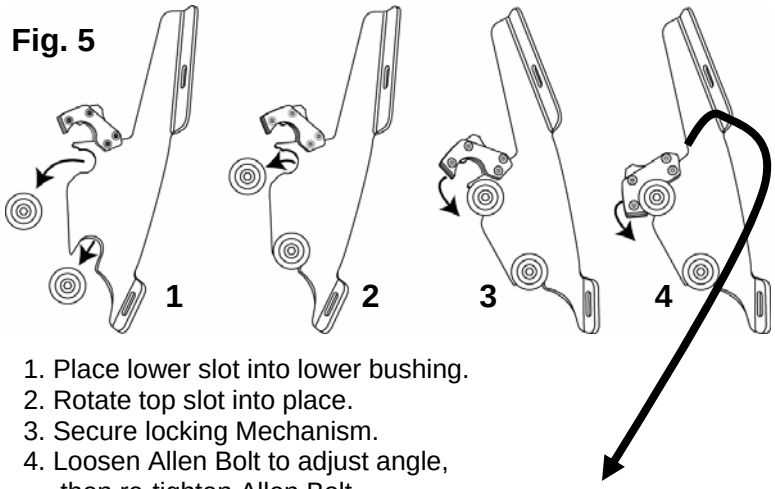

1. Place lower slot into lower bushing.
2. Rotate top slot into place.
3. Secure locking Mechanism.
4. Loosen Allen Bolt to adjust angle, then re-tighten Allen Bolt.

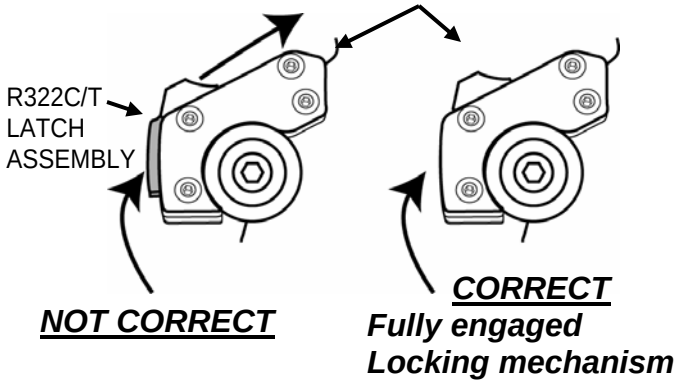
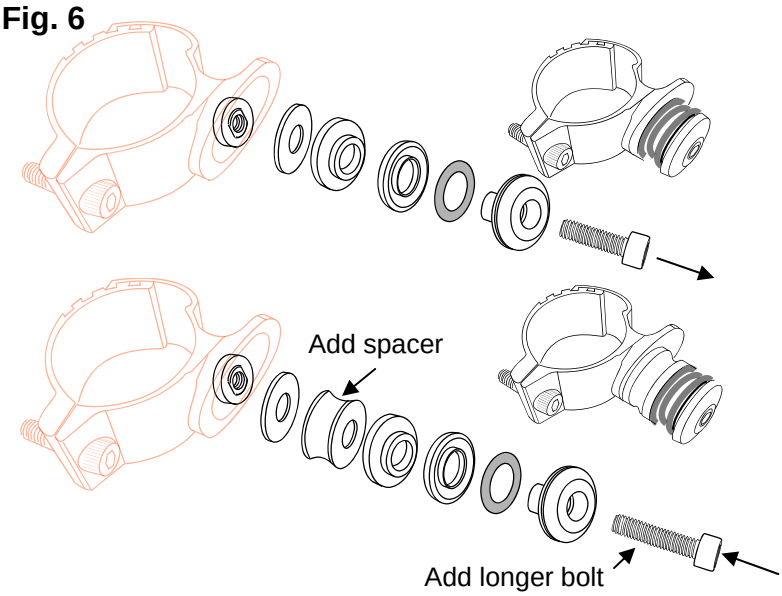
Fig. 6