UTV Speaker Cube Installation Instructions

Stock No.: 3510

Please read and understand these instructions completely before installation to avoid injury to yourself or damage to the vehicle or accessory.

Dealer: These instructions contain important information for future reference and must be given to the customer at time of purchase or upon completion of installation.

Parts List:

ITEM	PART NAME	PART NO.	DESCRIPTION (60-3510)	QTY.
1	Speaker	100-3510	UTV speaker cube assembly	2
2	Bracket	52-0017	Male bracket half	4
3	Bracket	52-0018	Female bracket half	4
4	T-Handle Knob	52-0013	M6 x 35mm lg. T-handle knob, stainless steel	4
5	Spacer	57-0006	M6 x 12.5mm lg. spacer, aluminum	4
6	Spacer	57-0005	M6 x 25mm lg. spacer, aluminum	4
7	Nut	77-0006	M6 nylock nut, stainless steel	4
8	Screw	75-0003	M6 x 20mm lg. button head cap screw, stainless steel	8
9	Washer	76-0002	M6 lock washer, stainless steel	8

Please Note: The UTV Speaker Cube was designed to fit most UTV roll cages. Because roll cages may vary in design, use your best judgement in determining where to locate the speakers in order to provide a secure and stable installation.

1) Mount two sets of brackets on the vehicle's roll cage as indicated in **Image "A1"**. Insert the tongue of the male bracket into the groove of the female bracket and close the two halves. Please note that the threaded inserts of the bracket should face the same direction you intend to direct the speakers.

2) Secure the brackets with the supplied M6 x 35mm lg. T-handle knobs, M6 x 12.5mm spacers, M6 x 25mm spacers and M6 nylock nuts as indicated in **Image "A2"**. **Do not tighten at this point.** The brackets will need to be adjusted before this is done.

3) While holding the speaker in your desired mounting location, slide the brackets along your roll cage until the threaded inserts line up with the mounting plates on the back of the speaker as indicated in **Image "B"**.

4) Once the brackets are aligned, finish tightening all of their hardware. **Do not overtighten the T-handles as this will cause them to break the mounting brackets.**

5) Finish mounting the speaker by attaching it the the mounting brackets with the supplied M6 x 20mm lg. button head cap screws and M6 lock washers as indicated in **Image "C"**.

6) Mount the second speaker by following **Step 1** trough **Step 5**.

7) Complete the installation by running and securing the speaker wires to your stereo using the diagram indicated in **Image "D"**.

8) **Maintenance and Care:** Tighten all hardware after first use and periodically thereafter.

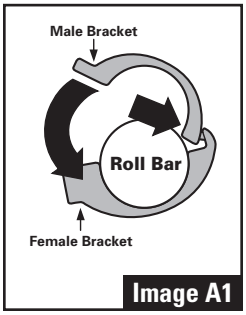

Image A1

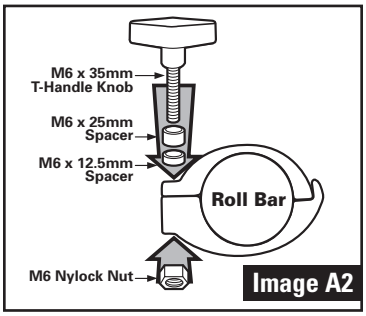

Image A2

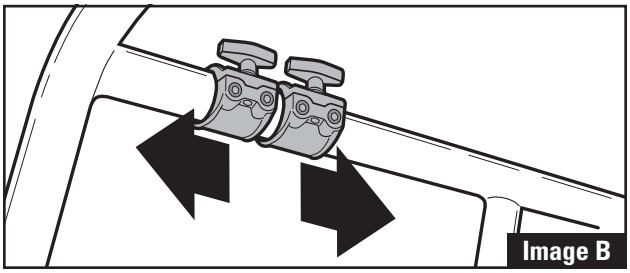
Image B

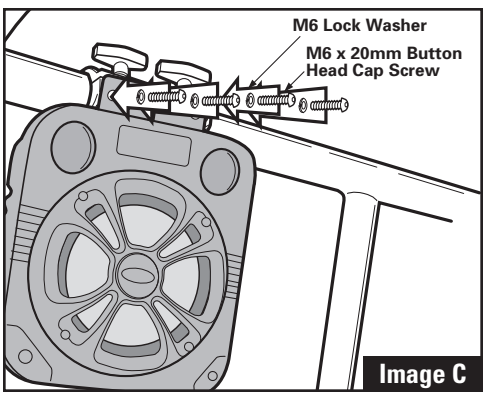

Image C

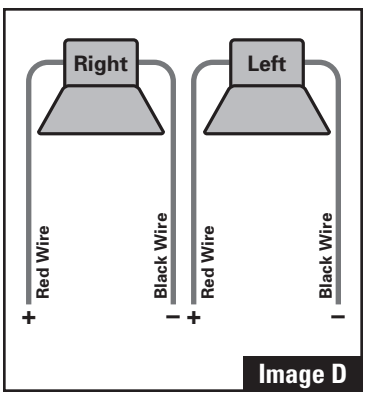

Image D

⚠WARNING **Failure to follow these installation instructions completely may void any warrantable components and result in property damage or personal injury. NEVER operate or transport UTV with unsecured cargo.**

For additional assistance, please contact our customer service department at:
Kolpin Outdoors, Inc.
205 N. Depot Street | Fox Lake, WI 53933
1.877.956.5746 | customerservice@kolpin.com