COBRA® 23801 E. La Palma Ave., Yorba Linda, Ca 92887 Ph. 714.692.8180, Fax. 714.692.5016

www.cobrausa.com

Items Supplied >

1 – INTAKE COVER W/ SCREEN / RING ASSEMBLY
1 – K&N® VENTURI AIR FILTER
1 – BILLET VELOCITY STACK
1 – MOUNTING PLATE
1 – RUBBER INTAKE BOOT
1 – SUPPORT BRACKET
3 – BOLT, 1/4"-20 X 5/8", BUTTONHEAD W/ LOCK PATCH
2 – BOLT, 1/4"-20 X 1/2", BUTTONHEAD W/ LOCK PATCH
2 – BOLT, M6 X 20mm, BUTTONHEAD
2 – LOCK WASHER, 1/4" INTERNAL TOOTHED
2 – SPACER, ALUMINUM

Application(s) >

HONDA SHADOW RS 2010 - 2014

Instruction Manual >

06-0114 - 01 / 02 / 03 / 04

Read all instructions carefully and completely before installing your new POWRFLO™ Intake.

1. Remove the (2) bolts that secure the stock air cleaner to the cylinder heads; these bolts and the steel bushings will not be reused.
2. On the backside of the air cleaner detach the two rubber hoses by squeezing the hose clamps with a pair of pliers and sliding them past the hose inlets (temporarily plug the hoses if oil drips).
3. Loosen the throttle body hose clamp on the backside of the air cleaner. Remove the air cleaner by pulling the rubber boot off the throttle body. Carefully rotate the air cleaner outwards from the bottom to disengage the intake snorkle that resides under the gas tank.
4. Using the (2) supplied 1/4"-20 X 5/8" buttonhead bolts and lock washers, assemble the velocity stack, mounting plate and rubber intake boot in the order shown in Figure 1. NOTE: The rubber boot lip needs to be sandwiched between the velocity stack and the mounting plate.
5. Remove the throttle body hose clamp from the stock boot and slide it onto the supplied rubber intake boot; position it as shown in Figure 1.

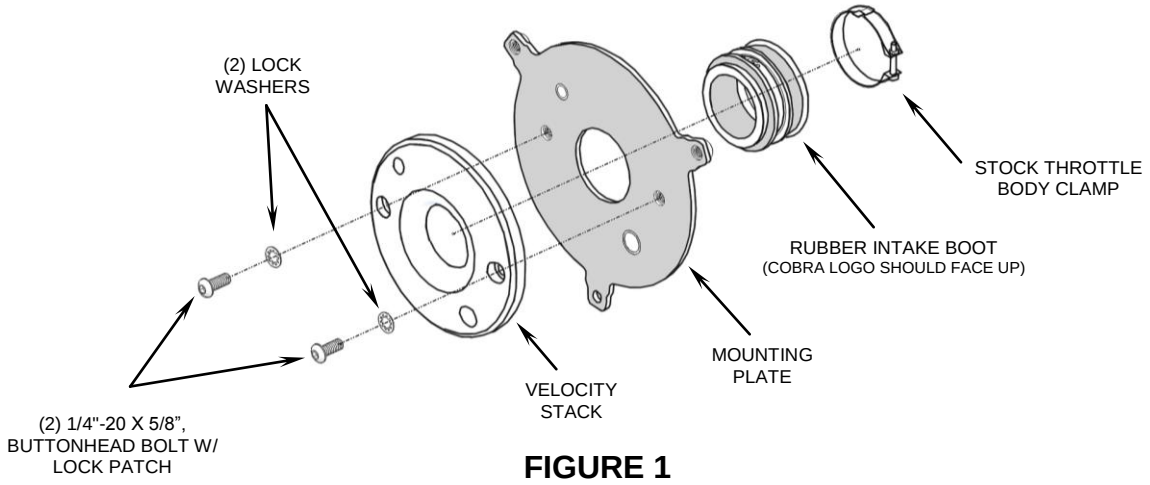

FIGURE 1

** Cobra® recommends you always wear a helmet while riding. Please never operate your motorcycle while under the influence of alcohol and/or drugs. Enjoy the new look of your motorcycle and please ride safely.*

6. Align the holes in the support bracket with threaded holes in the cylinder heads, then insert the (2) supplied M6 x 20mm buttonhead bolts through the support bracket, supplied spacers and into the cylinder heads. See Figure 2.
7. The mounting plate assembly is ready to be attached to the motorcycle. Attach the hoses and hose clamps that were disconnected in Step 2, to the inlet tubes on the mounting plate. Install the rubber boot onto the throttle body but leave the clamp loose for now.
8. Place the supplied K&N® filter onto the velocity stack. Insert the round intake screen into the chrome ring so the screen sits inside the edge of the ring. Place the ring and screen between the legs of the naked chrome intake cover as shown in Figure 2.
9. Place the naked intake cover, ring and screen assembled in Step 10, over the air filter and align each leg to the base mounting plate threaded holes. Be sure screen sits at a 45 ° angle to the bottom leg, and C/V logo'd leg is at the upper left position. Insert (1) supplied 1/4"-20 x 5/8" buttonhead bolt through the lower leg of the intake cover and into the base mounting plate and into the support bracket threads, see Figure 2. Lightly snug to hold all parts in place.
10. Insert (2) supplied ¼"-20 x ½" buttonhead bolts, into the upper legs of the naked intake cover, and threaded holes of mounting plate, Figure 2. Align and level the mounting plate assembly so the air cleaner will sit straight, then fully tighten the clamp over the throttle body, then all three 1/4"-20 buttonhead bolts that secures the air filter, mounting plate and support bracket, followed by the M6 bolts in the cylinders. Double check all clamps are correctly in place.

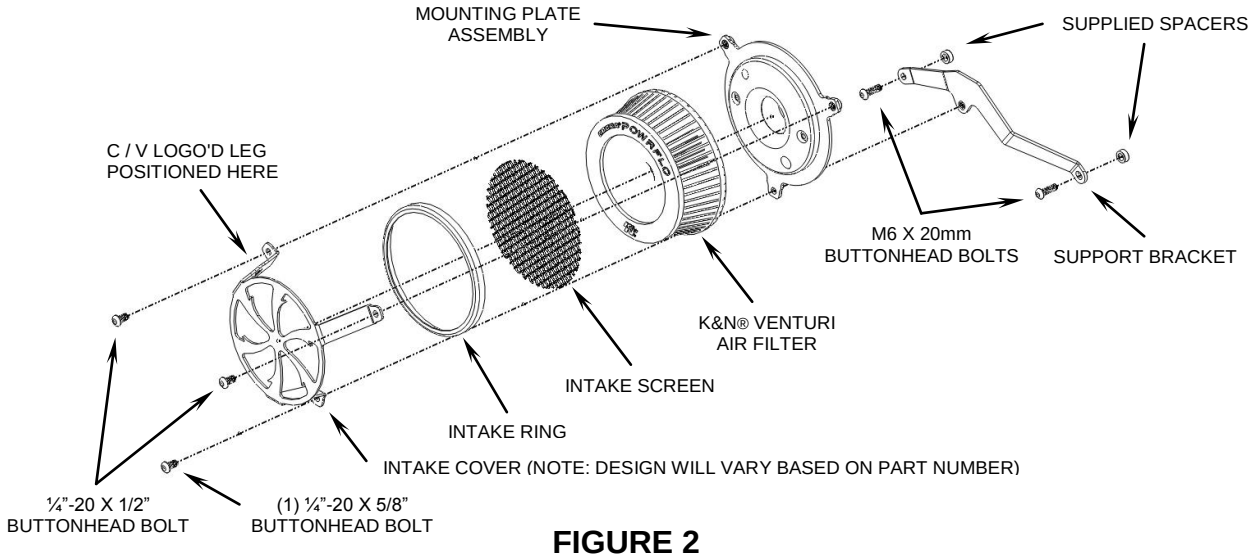

FIGURE 2

CALIFORNIA CUSTOMERS: In California, aftermarket parts that have been identified specifically as replacement parts or that have received an Air Resources Board Executive Order may be used on street motorcycles. All other emissions related aftermarket parts are for competition use only. A list of replacement parts and EO parts, and corresponding fitment is provided at: www.cobrausa.com

IMPORTANT Cobra highly recommends using a Fi2000® Fuel Management System to help eliminate lean conditions and possible popping sounds. **(Cobra Part# 92-1614 for 49 state models and Part# 92-1614-50 for CA models.)**